AN APL DIALOGUE

(between Socrates, the wise Greek, and Meno, the knowledgeable slave).

G.D. ROBERTSON,
I.P. Sharp Associates Limited,
132 Buckingham Palace Road,
London, U.K.
01-730 4567

Socrates: Salutations Meno! What brings you here today?

Meno: O Socrates[1], hello master. Can you pacify my troubled mind please. I have been talking to Protagoras about Rationalized APL[2] and neither of us can see how this notation could help us to understand why the gods have placed us here.

S: Does Greek help you in this respect Meno?

M: We agree that it does sir.

S: Then is it not proper that A Programming Language, sharpened by mathematical thinking, and resting firmly upon precision in interpersonal communication, likewise should contribute to that noble goal; and that in no small or shallow degree.

M: It is proper sir; but how?

S: If APL is to help in the explication of nature, we must begin with physical facts. Tell me an interesting fact Meno.

M: I have heard a very strange report. It isn't an article of faith required by the temple and the oracle at Delphi hasn't said it either.

S: What is it Meno?

M: Well, Achilles[3], as you know, can run very very fast. He claims that if he measures how fast a light beam from a fire moves by him when he is at rest, and then again measures another beam from that fire when he is running at full speed towards it, he gets exactly the same result, C, where

```
C←871128392 ⍝ MILES PER HOUR
```

He says that the speed of light is always the same, no matter how fast he runs either towards the light or away from it. His tortoise friend also gets the same result when Achilles moves at different speeds holding a candle. In one hour a light beam always travels a length equal to 871,128,392 miles in any frame of reference at rest or uniformly moving with respect to the Earth.

```
'FACT'⊢C=871128392 ⍝ C IS THE RESULT OF A MEASUREMENT
```

S: Crikey! That is indeed remarkable Meno.
We should more readily give credence to immediate experience of nature and it's natural interpretation than to the most cogent a priori deductions. Therefore, trusting Achilles, let us accept this observation as fact.

M: If you say so master.

S: Not because I say so Meno, but because the fact has been verified by Achilles' experience and we can't run fast enough to corroborate it.
How do you define length Meno?

[1] Socrates (470-399 BC) was condemned to death for misleading the youth of Athens. He taught that it is preferable to suffer wrong than commit it.

[2] Rationalized APL (1983), I.P. Sharp Associates Research Report Number 1 by K.E. Iverson.

[3] Achilles was cited in a paradox by Zeno (490-430 BC) suggesting Achilles could never beat a tortoise in a race if the latter gets a start because always, by the time he arrived at the point the tortoise was it has moved on half again, say. It is solved by

```
'TRUE'⊢2=+/÷2*(⍳¯)-⎕IO
```

I.P. Sharp Associat

M: Well; Pythagoras [4] said that the length of the hypotenuse of a right angled triangle squared is equal to the sum of the squares of the other two sides.

S: Express that in APL please and draw a diagram.

M: OK. In two dimensions, a Democritean [5] atom at point P has a position described exactly in APL by the two element vector

```
P←X1P, X2P
```

and the length of the line from the origin to P is

```
(+/P*2)*÷2
```

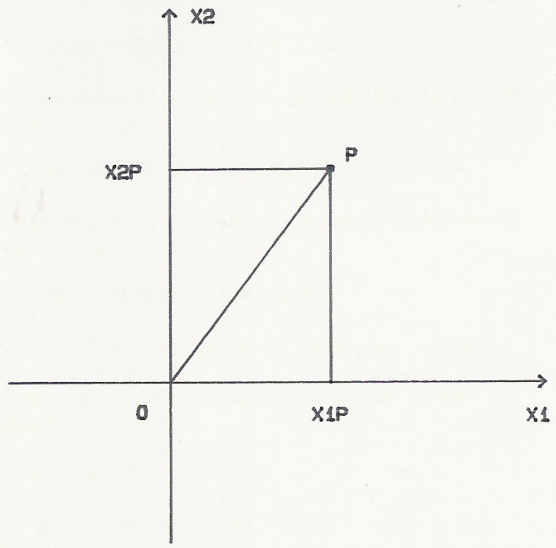

S: I see. So for any atom in this two dimensional space, given your stationary system of reference, you can define a function which determines the length of the line joining the origin of the reference frame and the point occupied by the atom.

M: Yes. Using the new symbol ⊢, which I call line,

```
⊢←'(+/ω*2)*÷2'∇''
```

[4] Pythagoras (570-490 BC) attempted to formulate a mathematical explanation of all reality. He preached the doctrine of the transmigration of souls.

[5] Democritus (480-370 BC) argued that since nothing can come from nothing, and motion, which requires a void, really occurs, reality must consist of atoms moving in a void.

S: What about two atoms, one at point P and the other at point Q? What is the distance between them?

M: OK.

```
P←X1P, X2P
Q←X1Q, X2Q
```

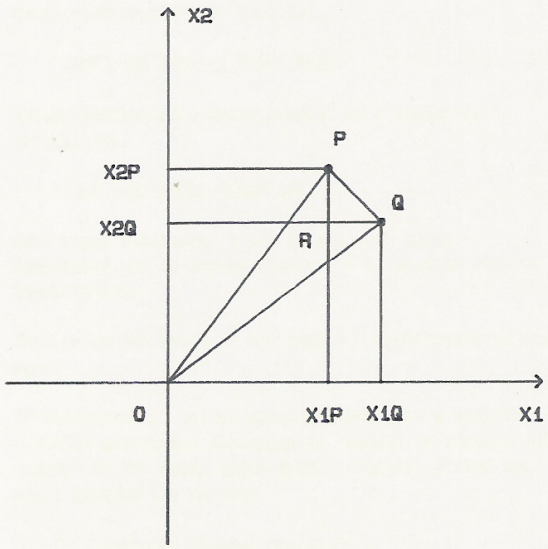

the distance PQ is equal to the square root of RQ squared plus RP squared. The distance RQ is the difference between the X1 coordinates of P and Q while RP is the difference in their X2 coordinates. So the distance between P and Q is

```
(+/(P-Q)*2)*÷2
```

We can generalize the function ⊢ so that monadically it gives the length of the line joining a point to the origin of the reference frame, while dyadically it gives the distance between two points.

```
⊢←'(+/ω*2)*÷2'∇'(+/(α-ω)*2)*÷2'
```

If you don't like parentheses the ambivalent function can be written

```
⊢←'.5*⍟+/ω*2'∇'.5*⍟2*⍟+/α-ω'
```

S: That's very interesting Meno. Your function applies to three dimensions as well. And if you have lots of atoms, the positions of each being described in a row of a matrix, your function will give meaningful results here too.

M: Oh!

S: The laws of vector algebra are satisfied in APL. Given scalars M and N, and vectors P, Q and R:

Addition of vectors is commutative.

```
'TRUE'⊢(P+Q)≡(Q+P)
```

Addition of vectors is associative.

```
'TRUE'⊢(P+(Q+R))≡((P+Q)+R)
```

Multiplication of a vector by a scalar is commutative.

```
'TRUE'⊢(M×P)≡(P×M)
```

Multiplication of a vector by scalars is associative.

```
'TRUE'⊢(M×(N×P))≡((M×N)×P)
```

Multiplication of a vector by scalars distributes over addition.

```
'TRUE'⊢((M+N)×P)≡((M×P)+(N×P))
```

Multiplication of a scalar by vectors also distributes over addition.

```
'TRUE'⊢(M×(P+Q))≡((M×P)+(M×Q))
```

Can you write functions for the products of vectors?

M: If the symbol ∘ represents the dot product of two vectors P and Q then

```
∘←'+/⍵*2'∇'+/⍺×⍵'
```

The monadic form is the dot product of a vector with itself.

The dot product is commutative.

```
'TRUE'⊢(P∘Q)≡(Q∘P)
```

Dot distributes over addition.

```
'TRUE'⊢(P∘(Q+R))≡((P∘Q)+(P∘R))
```

Multiplication of a dot product by a scalar is associative.

```
'TRUE'⊢(M×(P∘Q))≡((M×P)∘Q)
```

Further, if the symbol X represents the cross product of two three element vectors, then

```
X←''∇'((1⌽⍺)×¯1⌽⍵)-(¯1⌽⍺)×1⌽⍵'
```

The cross product is anticommutative.

```
'TRUE'⊢(PXQ)≡-(QXP)
```

Cross distributes over addition.

```
'TRUE'⊢(PX(Q+R))≡((PXQ)+(PXR))
```

Multiplication of a cross product by a scalar is associative.

```
'TRUE'⊢(M×(PXQ))≡((M×P)XQ)
```

Both these functions, ∘ and X, apply to three dimensions and to arrays whose rank is greater than or equal to one.

S: What about the angle of the vector P with regard to the axes?

M: If the symbol ⌊, called corner, represents a monadic function giving the direction in radians of a vector with respect to the axes, and a dyadic function giving the angle between two vectors,

```
⌊←'¯2○⍵÷⊢⍵'∇'¯2○(⍺∘⍵)÷(⊢⍺)×⊢⍵'
```

The angle between vectors P and Q is given by

```
P⌊Q
```

and the direction of P by

```
⌊P
```

S> It is useful to note that

```
P⊢Q
```

will give the same result in all stationary frame of reference.

M: Ah! We have a scientific law here. Given any two frames of reference A and B and any two points P and Q:

```
AP←AX1P, AX2P, AX3P
AQ←AX1Q, AX2Q, AX3Q
BP←BX1P, BX2P, BX3P
BQ←BX1Q, BX2Q, BX3Q
```

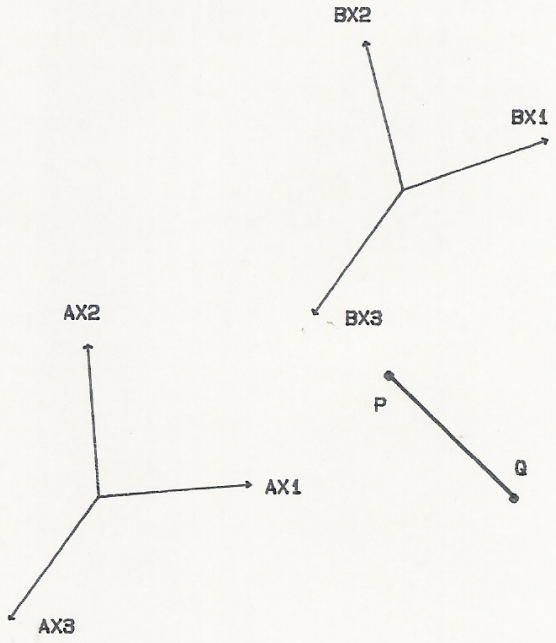

'LAW' ⊢ (AP⊸AQ) = (BP⊸BQ)

S: Humm. Before a general statement about nature is raised to the status of a law, it should be subjected to rigorous experimental verification under a variety of circumstances. Given two frames of reference A and B, if A were in motion relative to B, I am not certain that measurements of the distance PQ in each frame of reference would agree.

M: Don't be a Cretian Socrates! It's obvious they would.

S: Things which seem obvious are not necessarily true, neither is what is true necessarily obvious. Let us think carefully about this. By allowing A to be in motion relative to B, we have implicitly introduced the concept of time, for speed is distance moved divided by time taken.

M: Granted.

S: Our judgements of the moment of time (as opposed to chronological order) are actually judgements of simultaneous events. For example, you arrived simultaneously with the shaddow on my sun dial here falling at 12 o'clock. While this definition of time is satisfactory for events in the vicinity of my dial, it isn't when we wish to evaluate times of remote events.

M: Why not Socrates?

S: Because it takes time for information regarding these remote events to get here. No signal in nature travels infinitely fast.

You say Achilles found the speed of light to be 671,128,392 mph in all reference frames even if they are moving with respect to one another.

M: Yes he did.

S: Let us use this fact to synchronise a set of clocks in reference frame A using huge measuring rods each of length C miles. If I place identical clockwork mechanisms at each end of a rod I can synchronise them in the following manner: Arrange for a light beam to leave the first clock at 12 o'clock. When the tip of the beam arrives at the second clock, that clock is to be set to 1 o'clock since it takes one hour for light to travel the length of the rod. Let this be done for a grid of clocks separated by such rods.

We then have a synchronised space-time reference frame wherein everyone will agree about spacial and temporal assignments. Any event in this reference frame can be given a coordinate position by means of the measuring rods, and a time by associating the moment of the event with the time on the nearest clock. This is the time of the event in that reference frame. Of course, to be accurate, we should have a much finer grid.

At 12 o'clock on our local clock, we believe all other clocks in this synchronised frame will, at that instant, also read 12 o'clock, although, of course, we can't see what they are actually reading at that instant because of the time delay associated with the distance involved.

The stars which we see in the heavens are their younger appearances of even aeons ago!

M: What you say makes syllogistic sense. I can't fault the logic. But do we really need to bother with all these clocks and rods?

In your synchronised space-time reference frame, these are the times at which observers at each clock see the origin clock reading 12:

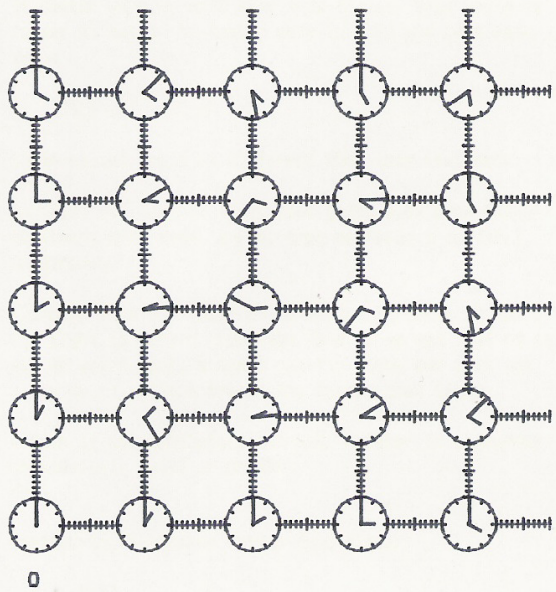

S: We are trying to find a law of distance which is not affected whether we use one or other of two systems of coordinates in uniform translatory relative motion.

M: Go on then master.

S: Imagine there are two similarily oriented synchronised space-time reference frames A and B, and that B is moving at velocity ABX1V in the X1 direction relative to A.

Suppose also that at the moment when their origins meet both A's and B's origin clocks read 12. At this instant a candle is uncovered at the common origin. Two observers, one at the origin of frame A and the other at the origin of frame B, agree that the light departed at 12 o'clock. A second observer in frame B is naturally stationary with respect to the first in B but is situated vertically above him. The distance in miles between them is given by C times the decimal hour on his clock, BT, when the light arrives.

While the light is travelling along axis BX2, the whole reference frame B is moving relative to A. If, when the second observer in B receives the light signal, there happens to be a second observer in A at that position, the question is; What is the reading on his clock?

M: There are four observers altogether. Two in A and two in B. One in A and one in B are coincident when the light departs, and one in A and one in B are coincident when the light arrives.

Let's assume decimal clocks at the common origin which both read zero when the light departs. The second clock in A reads AT and the second clock in B reads BT at a place and time the light arrives. According to A, the B clock has moved a horizontal distance

ABX1VxAT

and the light has travelled a diagonal distance

CxAT

while for B the light has travelled a vertical distance

CxBT

The situation can be summarised in a right angled triangle.

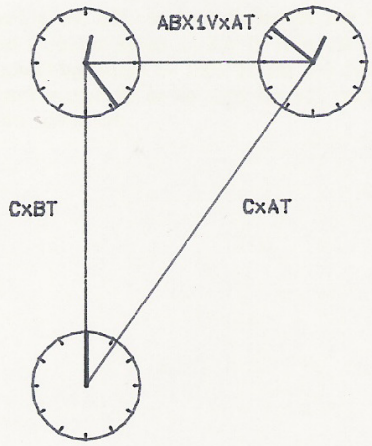

Applying Pythagoras to this triangle gives the relation between the readings on the clocks in A and B as

```
T←'÷0o(⍳⍵)÷C'V''

'FACT'⊢AT=BTxT(ABX1V,0,0)
```

I admit I am surprised that clocks at the same place read differently. Surely it is just an illusion that time can go at different rates in different frames of reference.

If Castor were to move away from Pollux, they would no longer be twins. If Castor were to turn and come back, since

```
'TRUE'⊢(Tω)=(T-ω)
```

their clocks would be different when they next met!

Achilles did say his clock kept going slow with respect to Athens mean-time; and he does maintain a youthful appearance!

S: Although from our frame of reference it takes 28 years for light to arrive from Vega (and so we see Vega as it was 28 years ago), a nymph can fly there and only age a few hours without travelling faster than light.

A twin is not absolutely twinned, neither is a journey conclusively small or great!

M: Eh?

S: Considering distances rather than times:

```
AL←CxAT
BL←CxBT
'FACT'⊢AL=BLxT(ABX1V,0,0)
```

So distances too are measurably different in the two frames of reference.

M: Oh I see!

S: Take another example. Again we have the two frames A and B moving at velocity ABX1V relative to one another in the X1 direction. Again the candle is uncovered when the space-time origins coincide. Since the speed of light is the same when measured in both frames of reference, observers situated at some distance round their own origins will report that the light from their origin forms an expanding sphere centred on their own origin.

M: That seems paradoxical. Surely there is only one sphere. It must be centred either on A's origin or on B's. At any rate, it can't be centred on both because they only coincide at the instant when the light first departs and not thereafter.

S: Consider the situation either from A's point of view or from B's. There is no third absolute perspective.

M: Right. Taking the situation from A's point of view; after time ATP the wavefront at some arbitrary point P will have reached a distance C times ATP from the origin. In other words, the wavefront will form an expanding sphere radius C times ATP at time ATP.

```
AP←AX1P,AX2P,AX3P
```

AP is a point on the wavefront at time ATP.

```
'FACT'⊢(CxATP)=⊢AP
```

S: If you write

```
AX4P←0J1xCxATP
AP←AX1P,AX2P,AX3P,AX4P
```

Then the expression becomes

```
'FACT'⊢0=⊢AP
```

M: Nice one master. Exactly the same holds for B.

```
BX4P←0J1xCxBTP
BP←BX1P,BX2P,BX3P,BX4P
'FACT'⊢0=⊢BP
```

Squaring the 0J1, as is done inside the function ⊢, gives a factor minus 1. One is then taking the square root of something which is zero giving the length of the four element vector BP to be zero for all space-time points on the wavefront.

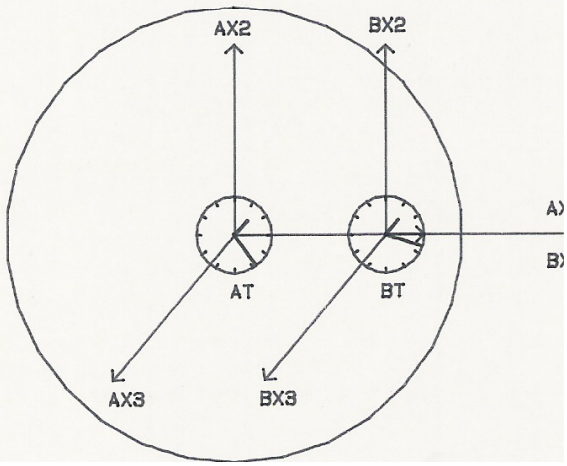

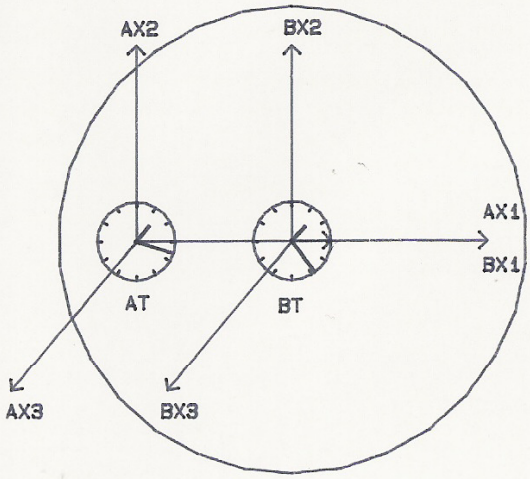

S: Since the clocks in A and B were synchronized in a manner exactly similar to the arrangement just described, we can now state the law which we originally sought. The four dimensional generalization of Pythagoras' theorem yields; the space-time length from the common origin to any point P is the same for all reference frames in uniform relative motion.

```
'LAW'⊢(⊢AP)=(⊢BP)
```

Also, for two points P and Q, the four dimensional distance between them is the same for all such frames.

```
'LAW'⊢(AP-AQ)=(BP-BQ)
```

M: Amazing!

S: Both coordinate systems are describing the same light wave, so there must be a transformation which would take us from A coordinates to B coordinates and back again at will.

M: This transformation must be a function of ABX1V. That is the only variable there seems to be here.

S: Carry on Meno.

M: Well, we need a matrix function of a vector, call it ⍞, which takes an argument of the relative vector velocity V (in our case ABX1V, 0, 0) and returns a matrix of four rows and four columns such that

```
'FACT'⊢BP≡(⍞V)+.×AP
'FACT'⊢AP≡(⍞-V)+.×BP
```

This is the case whatever the relative velocity, V. Combining the transformation with its inverse leads to

```
'TRUE'⊢(4 4⍴1 0 0 0 0)≡(⍞⍞V)+.×⍞V
'TRUE'⊢(4 4⍴1 0 0 0 0)≡(⍞V)+.×⍞⍞V
```

for all V, by definition. These relations lead to the conclusion that

```
'FACT'⊢(⍞-V)≡⍞⍞V
```

S: Another way of picturing the relationship between A and B, ignoring the X2 and X3 axes because they are not involved, is obtained by regarding the velocity differe between them as as a rotation α of the space-time coordinates so that

```
'FACT'⊢α=AX1∧BX1
```

and then, naturally,

```
'FACT'⊢α=AX4∧BX4
```

because we are dealing with orthogonal axes.

M: Ah!

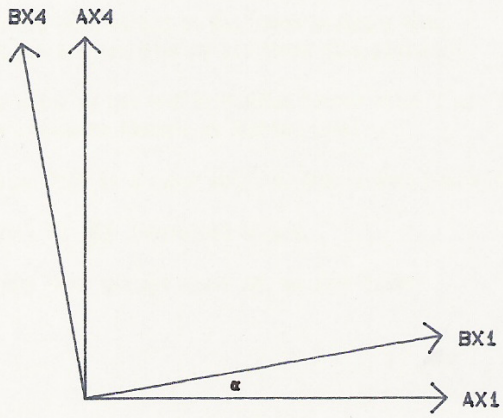

Now I can use Euclid[8] to find out what the transformation is. Take an arbitrary point P in the plane and drop perpendiculars from P to both sets of axes.

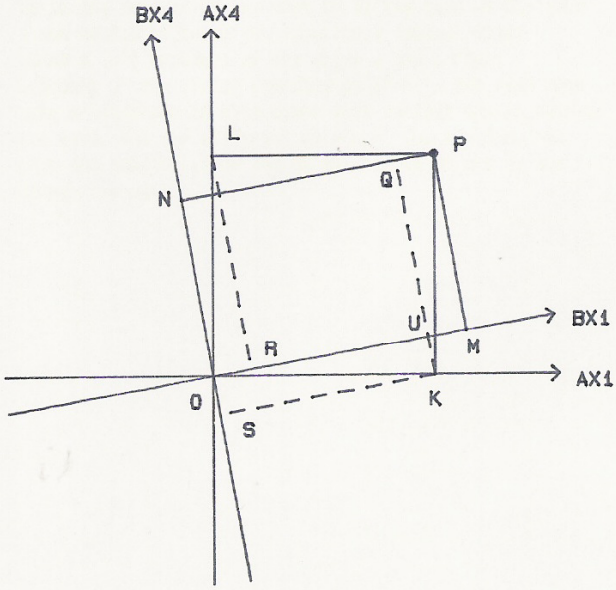

For a right angled triangle, one of whose adjacent sides is α,

$1\circ\alpha$

is equal to the length of the side opposite to α divided by the length of the hypotenuse, while

$2\circ\alpha$

is the adjacent side over the hypotenuse. Length OU is

$(2\circ\alpha)\times\underline{A}X1P$

since length OK is

$\underline{A}X1P$

Length OR is

$(1\circ\alpha)\times\underline{A}X4P$

since length OL is

$\underline{A}X4P$

Triangle ORL is congruent to triangle KQP since OL is the same length as KP and all the angles are equal. So length OR is the same as QP which is itself the same as UM. Now, OM is length OU plus UM, and OM is length

$\underline{B}X1P$

Therefore:

$$\text{'}TRUE\text{'}\vdash\underline{B}X1P=((2\circ\alpha)\times\underline{A}X1P)+((1\circ\alpha)\times\underline{A}X4P)$$

A similar argument gives the expression for

$\underline{B}X4P$

Considering that ON is SN minus OS, OS is KU which is

$(1\circ\alpha)\times\underline{A}X1P$

SN is the same distance as QK which is the same as RL by congruence. And RL is

$(2\circ\alpha)\times\underline{A}X4P$

Thus the matrix given by ⌹V is formally

$$\begin{matrix} 2\circ\alpha & 0 & 0 & 1\circ\alpha \\ 0 & 1 & 0 & 0 \\ 0 & 0 & 1 & 0 \\ -1\circ\alpha & 0 & 0 & 2\circ\alpha \end{matrix}$$

Any point $\underline{A}P$ is related to the same point $\underline{B}P$ by

$$\text{'}TRUE\text{'}\vdash\underline{B}X1P=((2\circ\alpha)\times\underline{A}X1P)+((1\circ\alpha)\times\underline{A}X4P)$$
$$\text{'}TRUE\text{'}\vdash\underline{B}X2P=\underline{A}X2P$$
$$\text{'}TRUE\text{'}\vdash\underline{B}X3P=\underline{A}X3P$$
$$\text{'}TRUE\text{'}\vdash\underline{B}X4P=((-1\circ\alpha)\times\underline{A}X1P)+((2\circ\alpha)\times\underline{A}X4P)$$

from the geometry.

S: You are well versed in Euclidean geometry Meno. But how are you drawing all these nice pictures?

M: I'm using my new HPQ722123ABCαω jotter which I got from the stoneware factory at Sparta. Look!

S: Golly! That is a super machine. What's that beside it?

M: That's my ⍵⍵ impersonal abacus.

S: I say; have you got Blunt APL on that tiny?

[8] Euclid (323-283 BC), is the famous Greek geometrician.

M: O Jupiter! Socrates! You mean Sharp APL on this micro.

S: Er, um .... yes. Do you have Sharp APL on that micro, Meno?

M: Of course I do. If you doubt my reasoning proving that OR is the same as UM, or that SN is the same as RL, then I can easily write an APL function ⍋ (spike) which takes a left argument of the angle α and a right argument of the vector coordinates of P. I can then draw lots of diagrams on this slate with various angles between the axes, and for different points P. You can then see that the lengths of OR and UM as well as SN and RL are always the same.

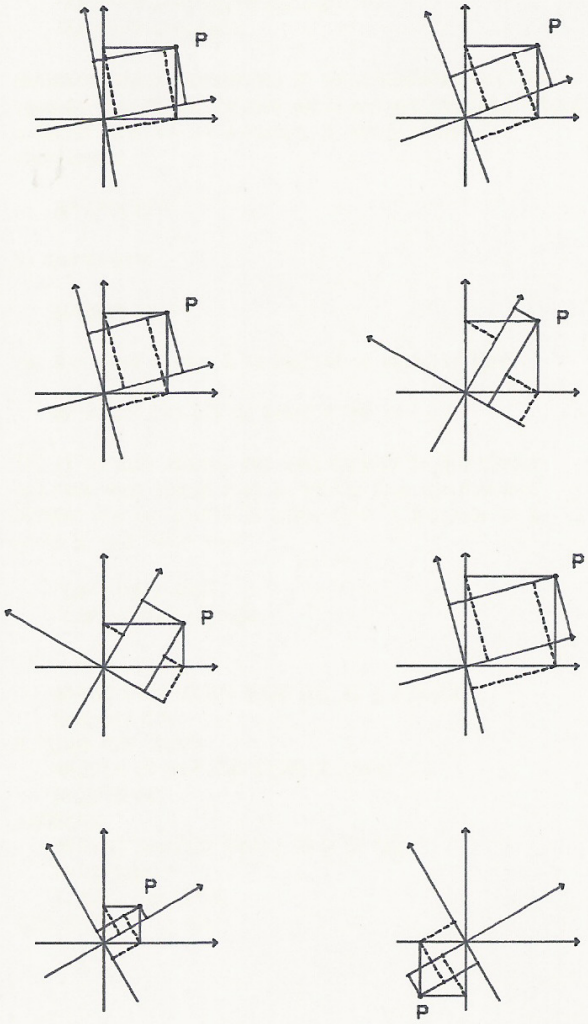

S: What is α then? What is its relation to reality?

M: No slave has a clue master.

S: Can you find it perhaps from

```
'TRUE'⊢BX1P←((2○α)×AX1P)+((1○α)×AX4P)
```

considering that the origin of B is at

```
BBO←0
```

in frame B, and at

```
ABO←ABX1V×AT
```

in frame A.

M: That's crafty Socrates. A's view and B's view of B's spacial origin yield

```
'FACT'⊢O←((2○α)×ABX1V×AT)+((1○α)×OJ1×C×AT)
```

which gives

```
'FACT'⊢(3○α)←OJ1×ABX1V+C
```

Where do we go from here?

S: Draw a right angled triangle with one angle equal to α and the adjacent side of unit length.

M: Easy.

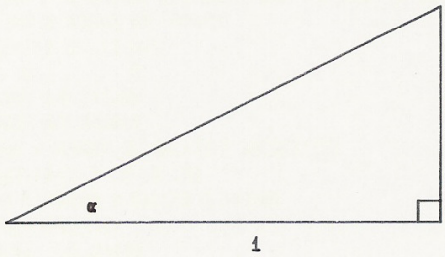

S: In a right angled triangle, such as you have there, the tangent of α is equal to the opposite side divided by the adjacent side. By construction, the adjacent side has length 1.

M: Ah, I see. We know 3∘α and the length of the adjacent side, so we can deduce that the opposite side must have length

```
OJ1×AB×1V÷C
```

and therefore the hypotenuse has length

```
⊢1, OJ1×AB×1V÷C
```

which is actually the same as

```
÷⍉AB×1V
```

Knowing the lengths of the sides of the triangle, expressions for 1∘α and 2∘α follow immediately.

```
'FACT'⊢(1∘α)=(⍉AB×1V)×OJ1×AB×1V÷C
'FACT'⊢(2∘α)=⍉AB×1V
```

Replacing these expressions in the transformation, and ignoring the X2 and X3 axes which are not involved, gives a matrix function of a scalar, B, which transforms coordinates

```
AP←A×1P, A×4P
```

to coordinates

```
BP←B×1P, B×4P
```

for any point P when B is applied to velocity AB×1V.

```
B←'2 2⍴(⍉⍵)×1, OJ1 OJ¯1×⍵÷C'⍎''⍕⍵
```

S: Try it on your abacus. See what happens to B's clocks and rods when viewed from A. Verify that the distance between any two points in space-time is the same in A as in B, and hence that

```
'LAW'⊢(⊢AP)=(⊢BP)
'LAW'⊢(AP+.×AQ)=(BP+.×BQ)
```

M:

```
      ⍝⍝TAKE FIRST CLOCK ALONG AX1 AT 1 O'CLOCK
      ⎕←A1←C×1 OJ1
6.7113E8 OJ6.7113E8
      ⍝⍝AB×1V IS HALF THE SPEED OF LIGHT
      ⎕←AB×1V←C÷2
335583198
      ⍝⍝TRANSFORMATION FROM A TO B IS TAB
      ⎕←TAB←BAB×1V
    1.1547  OJ0.57735
OJ¯0.57735     1.1547
      ⍝⍝APPLY TRANSFORMATION TO GET B'S VIEW OF A1
      ⎕←B1←TAB+.×A1
3.8748E8 OJ3.8748E8
      ⍝⍝B SEES THIS CLOCK ALMOST HALF AS FAR FROM THE ORIGIN
      ⍝⍝AS A SEES IT, AND AT ALMOST HALF THE TIME
      ⊢A1
0
      ⍝⍝A1 IS A SPACE-TIME POINT ON THE SYNCHRONISING WAVEFRONT
      ⊢B1
0
      ⍝⍝B1 IS ALSO ON THE SYNCHRONIZING WAVEFRONT
      'LAW'⊢(⊢A1)=(⊢B1)
1
      ⍝⍝TAKE TWO RANDOM POINTS IN SPACE-TIME
      ⎕←AP←A1×2??1000
3.4764E11 OJ4.4294E10
      ⊢AP
3.4481E11
      ⎕←AQ←A1×2??1000
1.4429E11 OJ2.5838E11
      ⊢AQ
OJ2.1434E11
      ⍝⍝THE SPACE-TIME DISTANCE BETWEEN THEM IS:
      AP+.×AQ
OJ6.8951E10
      ⎕←BP←TAB+.×AP
3.7585E11 OJ¯1.4957E11
      ⊢BP
3.4481E11
      ⎕←BQ←TAB+.×AQ
1.7436E10 OJ2.1505E11
      ⊢BQ
OJ2.1434E11
      'LAW'⊢(⊢AP)=(⊢BP)
1
      'LAW'⊢(AP+.×AQ)=(BP+.×BQ)
1
      ⍝⍝FOUR DIMENSIONAL DISTANCES ARE THE SAME IN BOTH FRAMES
      ⍝⍝TAKE A NUMBER OF POINTS
      ⎕←AS←C×(⍳3)∘.×1 OJ1
        0          0
  6.7113E8 OJ6.7113E8
  1.3423E9 OJ1.3423E9
      ⍝⍝AND A NUMBER OF RELATIVE VELOCITIES
      ⎕←AB×1VS←C×.3 .5 .9 .99
2.0134E8 3.3558E8 6.0401E8 6.6442E8
      ⎕←TABS←BAB×1VS
    1.0483  OJ0.31449
OJ¯0.31449     1.0483

    1.1547  OJ0.57735
OJ¯0.57735     1.1547

    2.2942  OJ2.0647
OJ¯2.0647     2.2942

    7.0888  OJ7.0179
OJ¯7.0179     7.0888
```

```
      ⎕←BS←⍉TABS+.×⍉AS
         0         0         0         0
         0         0         0         0

    4.9247E8  3.8748E8  1.5397E8  4.7575E7
  0J4.9247E8 0J3.8748E8 0J1.5397E8 0J4.7575E7

    9.8494E8  7.7495E8  3.0793E8   9.515E7
  0J9.8494E8 0J7.7495E8 0J3.0793E8 0J9.515E7
```

S: Can I borrow your impersonal abacus for a minute please Meno?

M: Here you are then.

S: Thanks a lot.
'BANG BANG BASH BASH BANG .....'

M: Go easy Socrates, you'll break the keyboard!!

S: Ah yes! I think the four dimensional transformation for a general three dimensional relative velocity motion is given by

```
      ⎕←'((⍺ω),⍹ω),¨⍉(-⍹ω),⍵'∇∘¨1
      ⍺←'(I∘.=I←⍳3)+ω∘.×ω×((⍵ω)-1)÷ω+.×ω'∇∘
      ⍹←'0J1×(⍵ω)×ω÷C'∇∘
```

If there is a third reference frame C moving at velocity BCX1V in the X1 direction with respect to B. .....

M: Oh please stop master. Perhaps, after all, the gods from their Olympian frame have an entirely different veiw from us of why we are in our here and now .....

S: ..... the picture would be this:

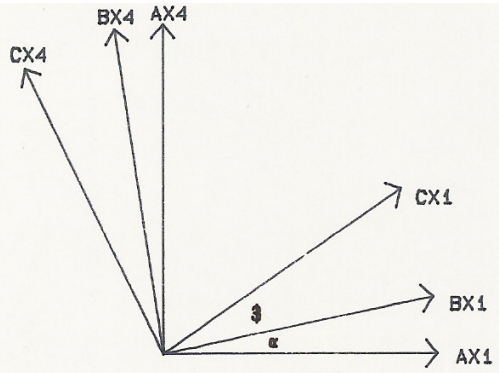

The velocity ACX1V of C relative to A is

```
'FACT'⊢ACX1V←0J¯1×CX3∘α+$
```

Since the tangent of the sum of two angles is equal to the sum of the tangents of each angle divided by 1 minus the product of the tangents of each:

```
'FACT'⊢ACX1V←(ABX1V+BCX1V)÷1+(ABX1V×BCX1V)÷C*2
```

which implies that one cannot reach the velocity C by compounding a finite number of relative velocities less than C.

M: SOCRATES!!

S: In summary:

NAME OF SYMBOL	SYMBOL	OVER-STRIKE	NAME	RANK	NAME	RANK	DEFINITION
LINE	⊢	⊢ →	LENGTH	0 1	DISTANCE	0 1 1	'(+/ω*2)*÷2'∇'(+/(α-ω)*2)*÷2'
DOT	∘	∘ ∘	DOT	0 1	DOT	0 1 1	'+/ω*2'∇'+/α×ω'
CROSS	X	/ \			CROSS	1 1 1	''∇'((1⌽α)×¯1⌽ω)-(¯1⌽α)×1⌽ω'
CORNER	⍁	⌊ /	DIRECTION	1 1	ANGLE	0 1 1	'¯2∘ω÷⊢ω'∇'¯2∘(α∘ω)÷(⊢α)×⊢ω'
GAMMA	Γ	Γ ¯	GAMMA	0 1			'÷0∘(⊢ω)÷C'∇''
2FRAME	⍹	2 ⎕	2FRAME	2 0			'2 2⍴(Γω)×1,0J1 0J¯1×ω÷C'∇∘¨0
1QUAD	⍺	1 ⎕	1QUAD	1 1			'(Γω)×0J1×ω÷C'∇''
3QUAD	⍺	3 ⎕	3QUAD	2 1			'(I∘.=I←⍳3)+ω∘.×ω×((Γω)-1)÷ω+.×ω'∇''
4FRAME	⍹	◊ ⎕	4FRAME	2 1			'((⍺ω),⍹ω),¨⍉(-⍹ω),Γω'∇∘¨1

M: O Socrates, now that I know all this I must be wise.

S: O Meno, now that I know all this I know I must be ignora